These materials were developed under the auspices of CalRecycle for specific technical training presentations and are posted as reference documents for the local government and CalRecycle staff who attended this technical training series. They are not intended to stand alone as informational or training materials.

If you require assistance in obtaining access to the presentations, call the Public Affairs Office at (916) 341-6300 or Dennis Corcoran at (916) 341-6395.

PART 3. CORRECTIVE ACTION PLANS

REGULATORY LANGUAGE

- **Section 20937. CIWMB - Reporting and Control of Excessive Gas Concentrations** (a)
  - (3) Within 60 days of detection, implement a remediation plan approved by the EA and CIWMB for the methane gas releases, place a copy of the plan in the operating record, forward a copy of the plan to the EA and CIWMB, and notify the EA that the plan has been implemented. The plan shall describe the nature and extent of the problem and the proposed remedy.
  - (4) Construct a gas control system that meets the criteria of Section 20939, designed by a registered civil or mechanical engineer, within a period of time specified by the EA. Installation of the system shall be in accordance with a design and in a manner approved for construction by the EA in coordination, if applicable, with the RWQCB.

REGULATORY LANGUAGE (cont.)

- **Section 20939. CIWMB - Control of Excessive Gas Concentrations** (a) A landfill gas control system shall be designed to:
  - (1) Prevent methane accumulation in on-site structures from exceeding the level specified in Section 20921(a);
  - (2) Reduce methane concentrations at the disposal site permitted facility boundary to the level specified in Section 20921(a);
  - (3) Reduce trace gas concentrations to the requirement specified in Section 20921(a); and
  - (4) Provide for the collection, treatment, and disposal of landfill gas condensate produced within the disposal site.

REGULATORY LANGUAGE (cont.)

- **Section 20939. CIWMB - Control of Excessive Gas Concentrations** (b) Subsurface landfill gas control systems may include, but are not limited to, one or more of the following:
  - (1) Active perimeter or interior control systems which are designed to accommodate the maximum expected flow rate from the disposal site and provide access for system monitoring and flow rate adjustment.
  - (2) Perimeter air injection systems which shall be installed in native soil between the refuse and the area to be protected.
  - (3) Passive systems, including cutoff trenches, slurry walls, and vent trenches, when used shall be constructed with an impermeable geomembrane liner.

REGULATORY LANGUAGE (cont.)

- **Section 20939. CIWMB - Control of Excessive Gas Concentrations** (c) Landfill gas control measures to protect structures and public health and safety shall include one or more of the following:
  - (1) Flexible membrane liners,
  - (2) Active collection systems,
  - (3) Passive collection systems designed to be upgraded to an active system,
  - (4) Alarms,
  - (5) Ignition source control,
  - (6) Utility collars installed within structures and outside in trenches, and
  - (7) Ventilation.

REGULATORY LANGUAGE (cont.)

- **Section 20939. CIWMB - Control of Excessive Gas Concentrations**
- (d) To ensure that the landfill gas control system is operating at optimum efficiency to control landfill gas, the operator shall provide for system monitoring and adjustment.

REGULATORY LANGUAGE (cont.)

- (e) To provide for the safe, efficient operation of the landfill gas control system, the operator shall implement a maintenance program in accordance with the following requirements:
  - (1) A site-specific operations and maintenance manual shall be maintained and kept current to reflect any expansion or modifications to the gas control system;
  - (2) An operations and maintenance manual shall provide for periodic inspections and servicing of gas control equipment; and
  - (3) Operations and maintenance shall be recorded and the records shall be retained by the operator.

REGULATORY LANGUAGE (cont.)

- (f) Construction Quality Assurance/Quality Control:
  - (1) The operator shall be responsible for providing inspections, as needed, to ensure the integrity of the system.
  - (2) Prior to construction, the designer shall obtain and review all applicable test reports, shop drawings, and manufacturer's certificates to verify that all equipment used or to be used in the gas control system has been manufactured in accordance with industry standards.

AVAILABLE GUIDANCE

- Substantial guidance on LFG monitoring systems
- Limited guidance on LFG remediation or corrective action plans
- “Technologies and Management Options for Reducing Greenhouse Gas Emissions from Landfills” (CIWMB, April 2008)

TECHNOLOGIES AND MANAGEMENT OPTIONS

- LFG BMPs
  - Design-Related BMPs for LFG Collection Components
  - BMPs for LFG Systems Equipment
  - BMPs for Enhanced O&M
  - BMPs for LFG Management Strategies
  - Enhanced Monitoring, Modeling, and Testing BMPs

TECHNOLOGIES AND MANAGEMENT OPTIONS (cont.)

- Landfill Design and Operations-Related BMPs
  - BMPs for Landfill Systems
  - BMPs for Landfill Cover Systems
  - BMPs for Landfill Operations
  - BMPs for Enhanced Landfills

TECHNOLOGIES AND MANAGEMENT OPTIONS (cont.)

- Assessing Technical Feasibility
- Evaluating Implementability
- Estimating Cost
- Estimating GHG Reduction Benefit
- Prioritization and Ranking
- Final Selection
- Action Plan

OPTIONS FOR CONTROLLING MIGRATION

- Active LFG Collection Systems
  - Full/Interior Systems
  - Perimeter Systems
- Passive LFG Collection Systems
  - Vent Trenches
  - Vent Wells
- Barrier Systems
- Air Injection Systems
- Building Protection Systems

CONTENT OF CORRECTIVE ACTION PLANS

- Introduction and Purpose
- Project Background and History
  - Regulatory Compliance and Status
- Site Background and History
  - Focus on information that relates to LFG exceedances
  - LFG monitoring data summary
  - LFG generation potential
  - Geology and preferential pathways
  - Hydrogeology/groundwater data, if relevant
  - Extent of refuse

CONTENT OF CORRECTIVE ACTION PLANS (cont.)

- Detailed Summary of the Problem
  - Source/cause of LFG migration
  - Summary of impacts (e.g., lateral migration, impacts to structures, groundwater impacts, etc.)
  - Why current system (if any) was not able to control migration ?
  - Unique landfill or LFG characteristics
  - Unique vadose zone or groundwater characteristics
  - Confirmation that impacts are LFG

CONTENT OF CORRECTIVE ACTION PLANS (cont.)

- Detailed Summary of the Proposed Remedy
  - Conceptual Plan
  - Rationale for selection
  - How plan specifically addresses problem
  - Schedule for implementation/construction
  - Schedule for completion of remediation
  - Summary of O&M program
  - Proposed enhancements to monitoring program to track progress

POSSIBLE REVIEW CRITERIA

- Does plan comply with regulations ?
- Is problem adequately investigated/ described ?
- Have all relevant site background data been provided ?
- Does proposed remedy fit the problem ?
- Do O&M and monitoring program seem sufficient ?
- Is schedule reasonable ?

WHAT TO LOOK FOR ?

- Designing and implementing gas control remedies for maximum effectiveness
  - Identify the goals for the project
  - Identify and evaluate potential remedies
  - Identify the design criteria
  - Select the appropriate technology(s)
    - Retrofit vs. new construction
  - Monitoring, operations and maintenance
    - How long should it take to mitigate a problem
      - System balancing and optimization
      - Time to collect and control gas

WHAT TO LOOK FOR – Building Protection

- Retrofit
  - Seal thru-slab penetrations
  - Utility trench dams & conduit seals
  - Expanded building ventilation
  - Install monitoring system
    - Single sensors
    - Continuous
  - Membrane barrier & interstitial venting?
    - (Have to raise floor deck)
  - Under slab venting (Difficult under existing slab)

WHAT TO LOOK FOR– Building Protection (cont.)

- New Construction
  - Under slab ventilation or air sweep
  - Minimize thru-slab penetrations
  - Utility trench dams & conduit seals
  - Membrane barrier
  - Enhanced building ventilation
  - Monitoring System
    - Single sensors
    - Continuous

WHAT TO LOOK FOR– Building Protection (cont.)

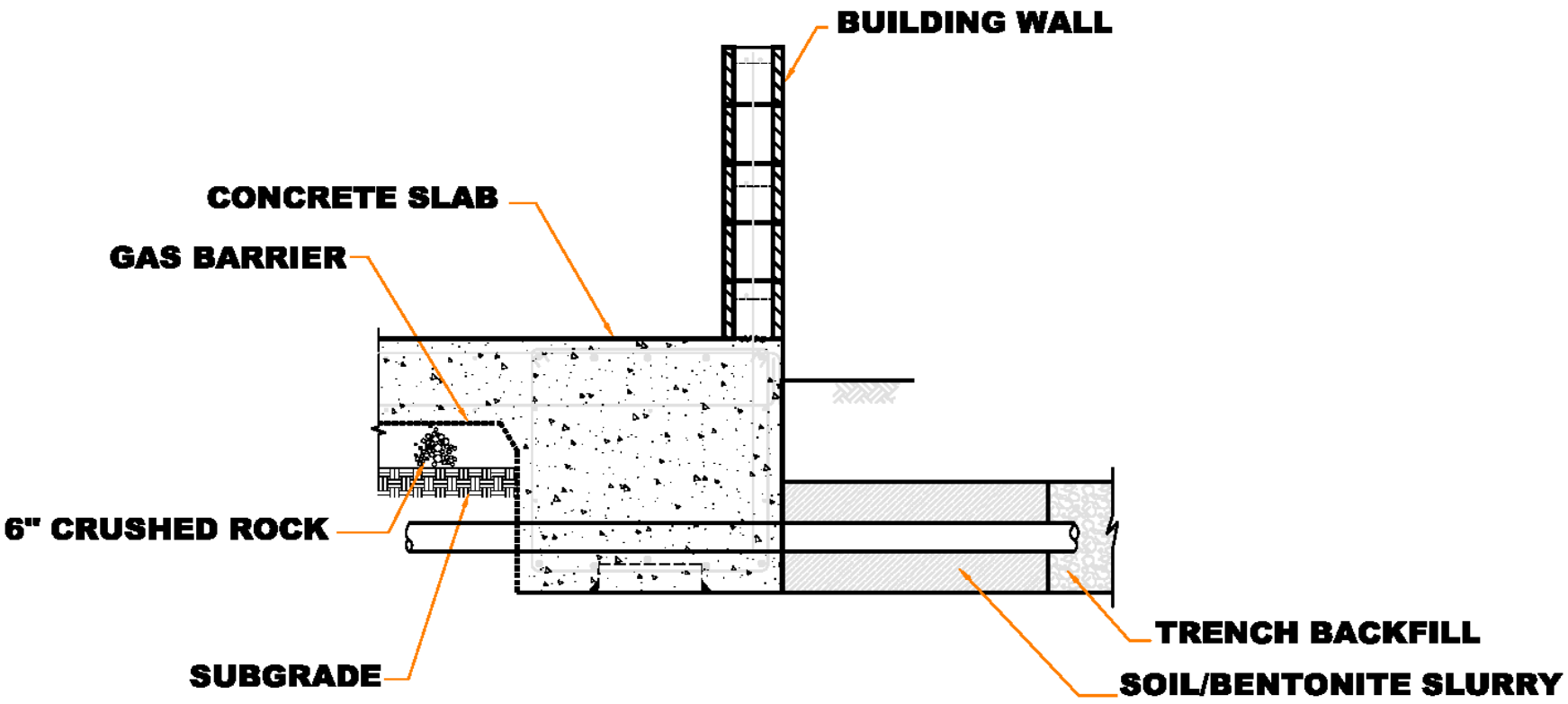

WHAT TO LOOK FOR– Building Protection (cont.)

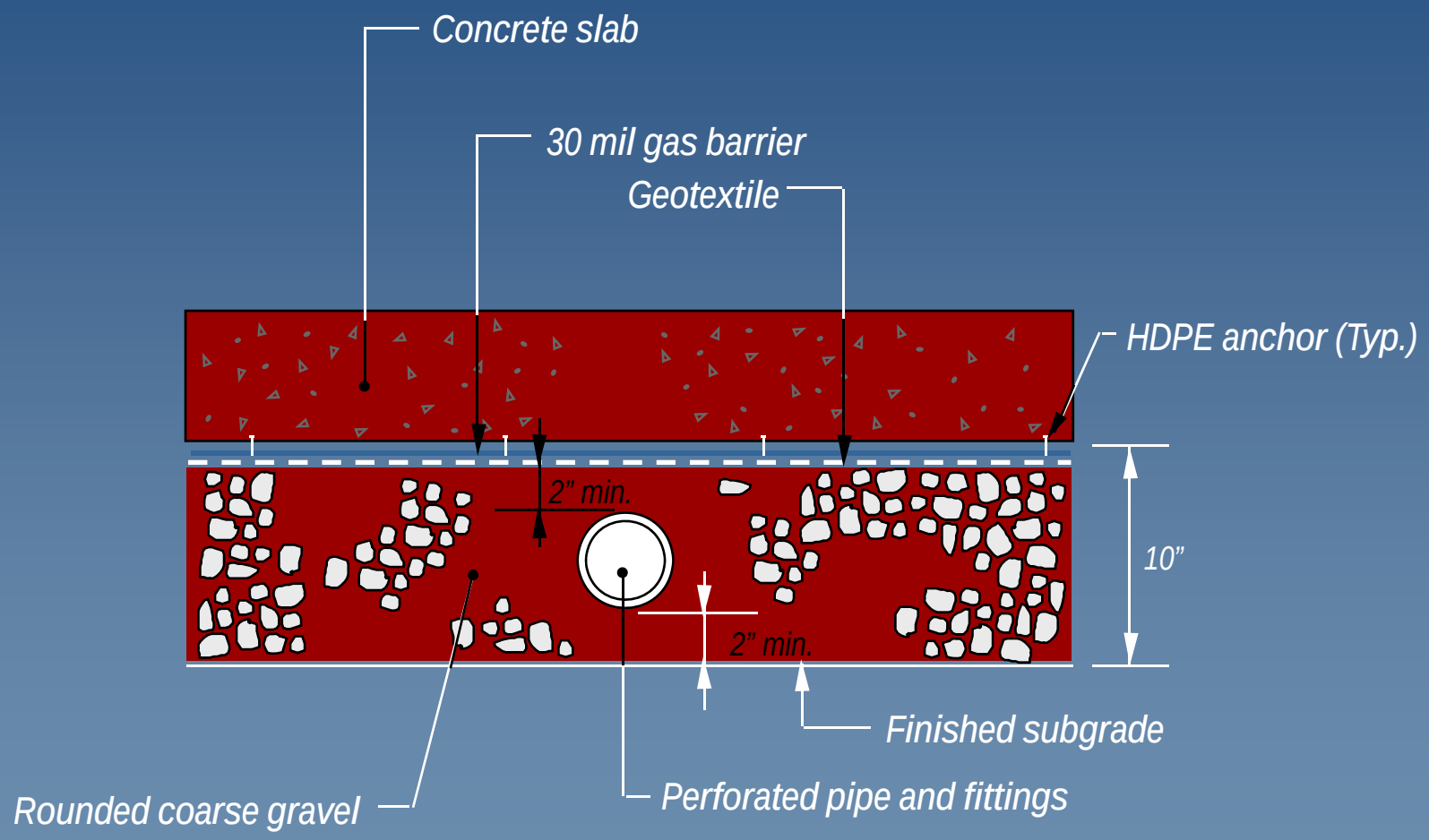

WHAT TO LOOK FOR– Passive Systems

- For Gas Migration Control
  - Passive barrier systems (may include venting)
  - Passive venting systems

WHAT TO LOOK FOR - Passive Barrier Systems

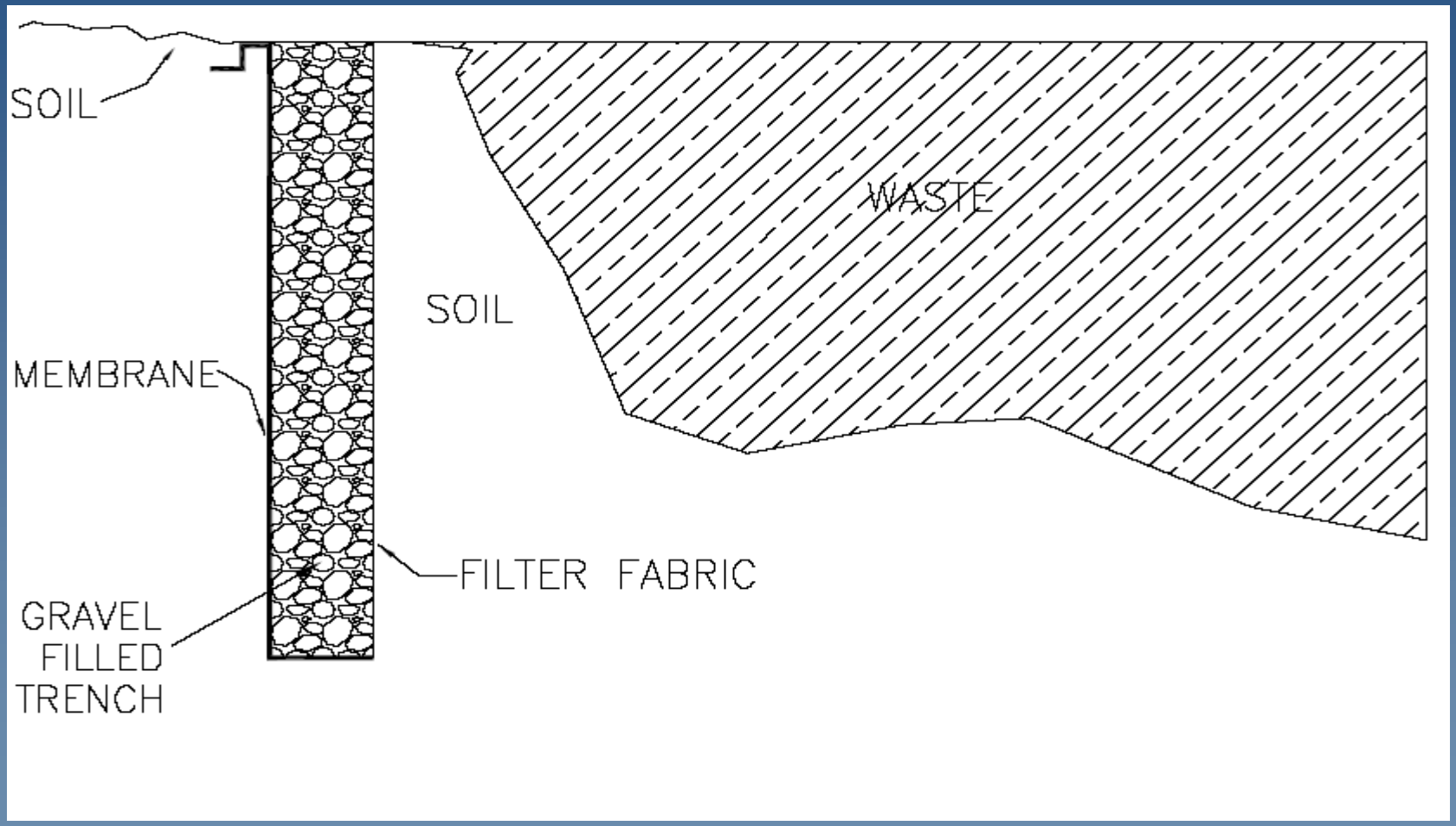

Advantages & Disadvantages of Passive Barrier Systems

- Advantages
  - Easy to operate
  - Low cost of operation
  - Minimal training required
- Disadvantages
  - Difficult to mitigate offsite gas
  - Less control over air emissions
  - Can be expensive to construct
  - Needs a competent boundary at the bottom of the barrier

WHAT TO LOOK FOR - Passive Venting Systems

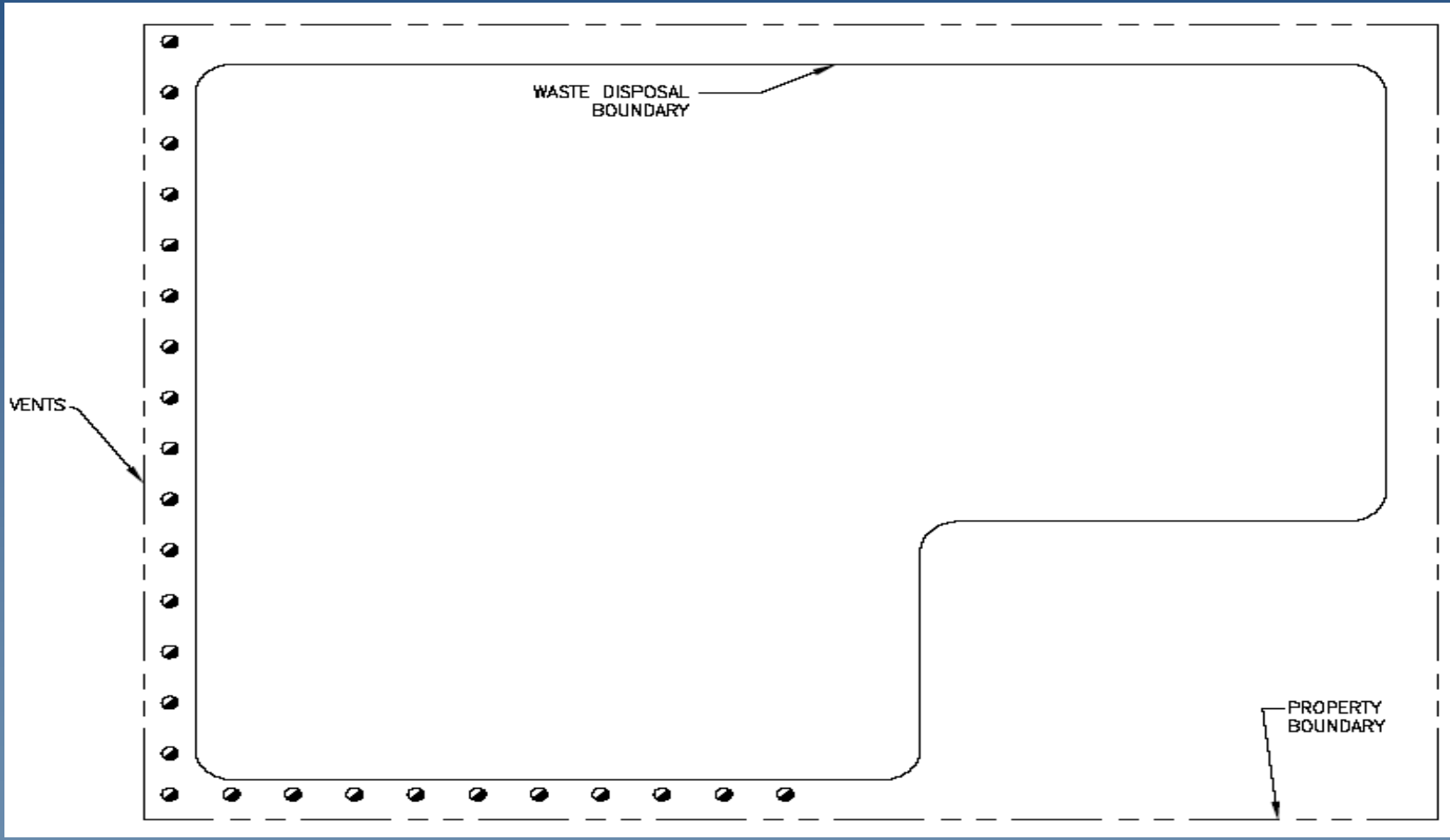

WHAT TO LOOK FOR - Passive Venting Systems

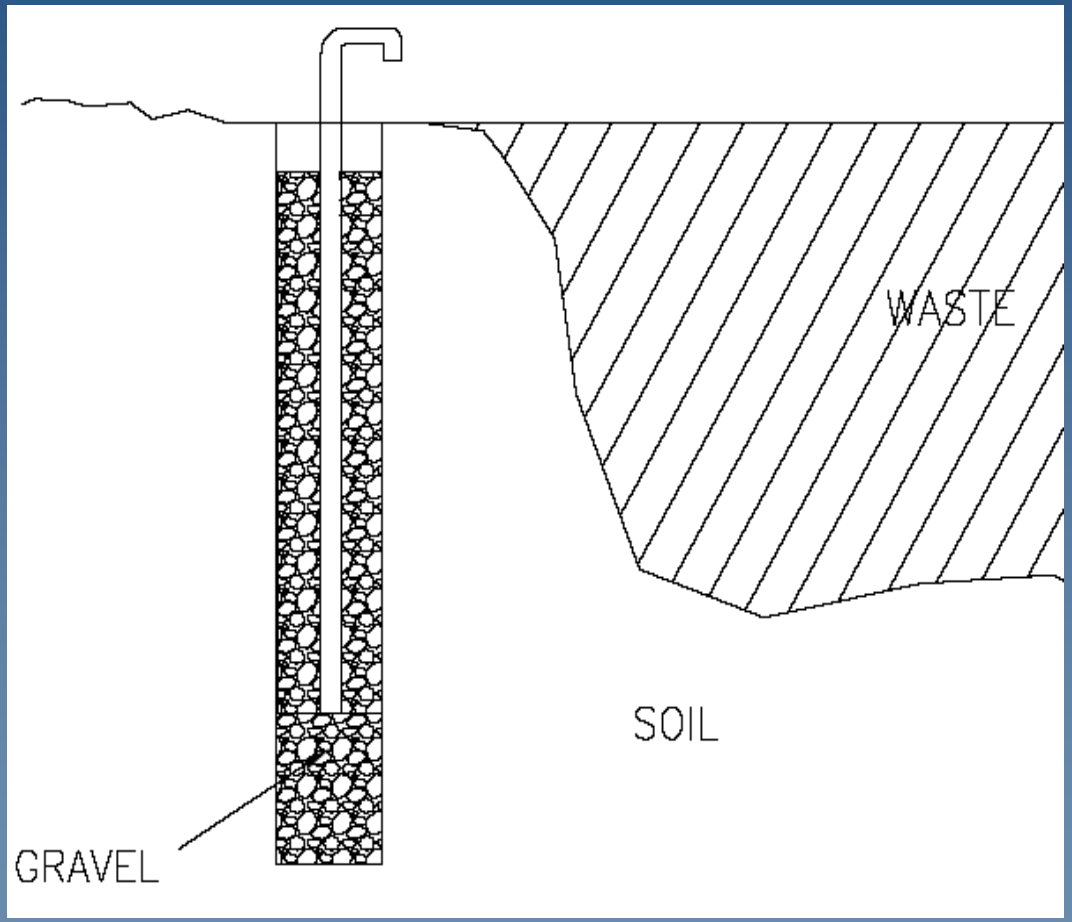

Advantages & Disadvantages of Passive Venting Systems

- Advantages
  - Easy to operate
  - Low cost of operation
  - Minimal training required
- Disadvantages
  - Difficult to mitigate offsite gas
  - Less control over air emissions
  - Will require more control points than an active system

WHAT TO LOOK FOR - Active Systems

- For Gas Migration, Emissions, Odor & VOC Control; and Groundwater Protection
  - Positive Pressure Barrier Systems
  - Active Interior Wellfield Extraction
  - Active Perimeter Wellfield Extraction
  - Belt and Suspensions

WHAT TO LOOK FOR - Positive Pressure Barrier Systems

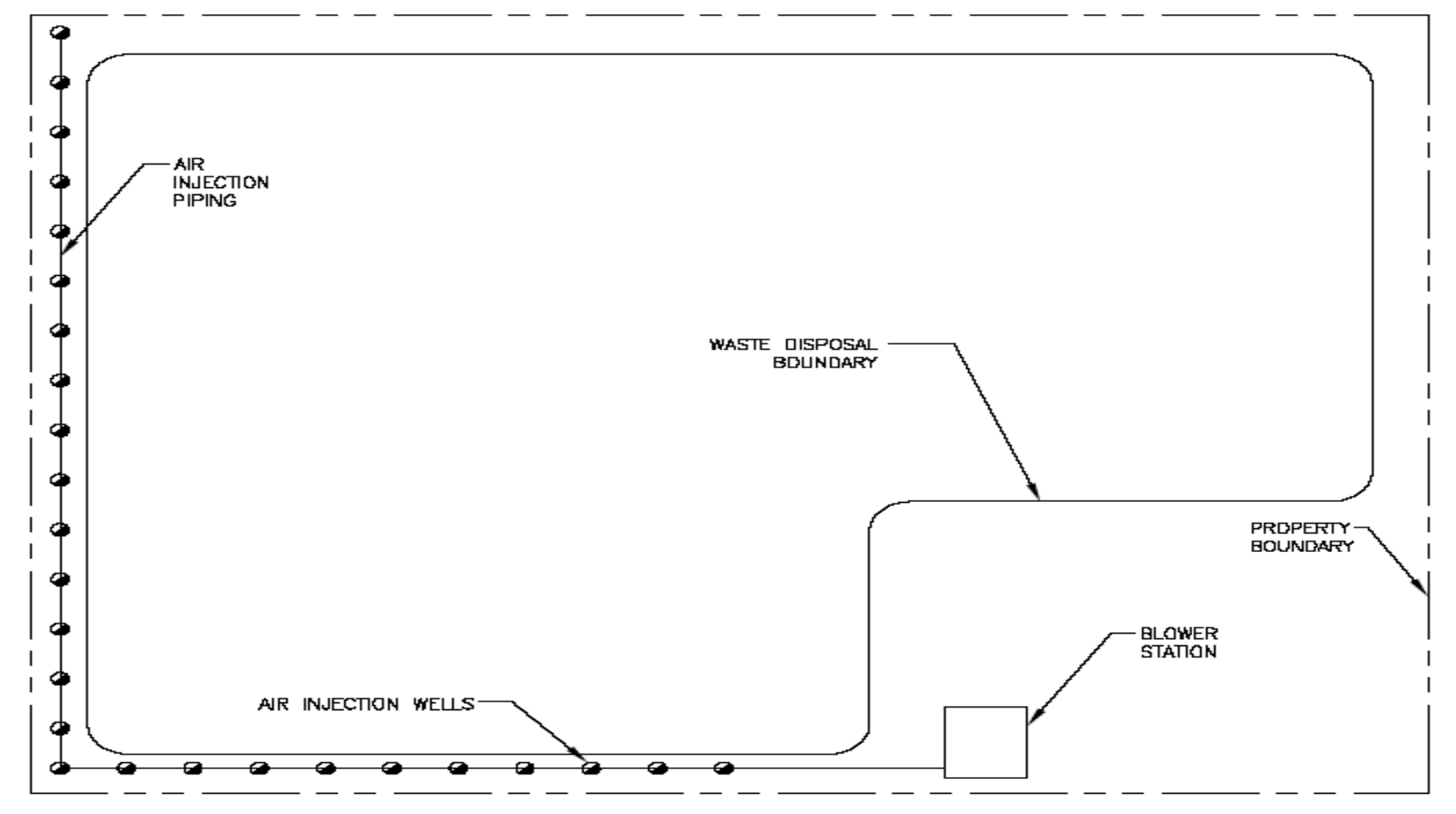

WHAT TO LOOK FOR - Positive Pressure Barrier Systems (cont.)

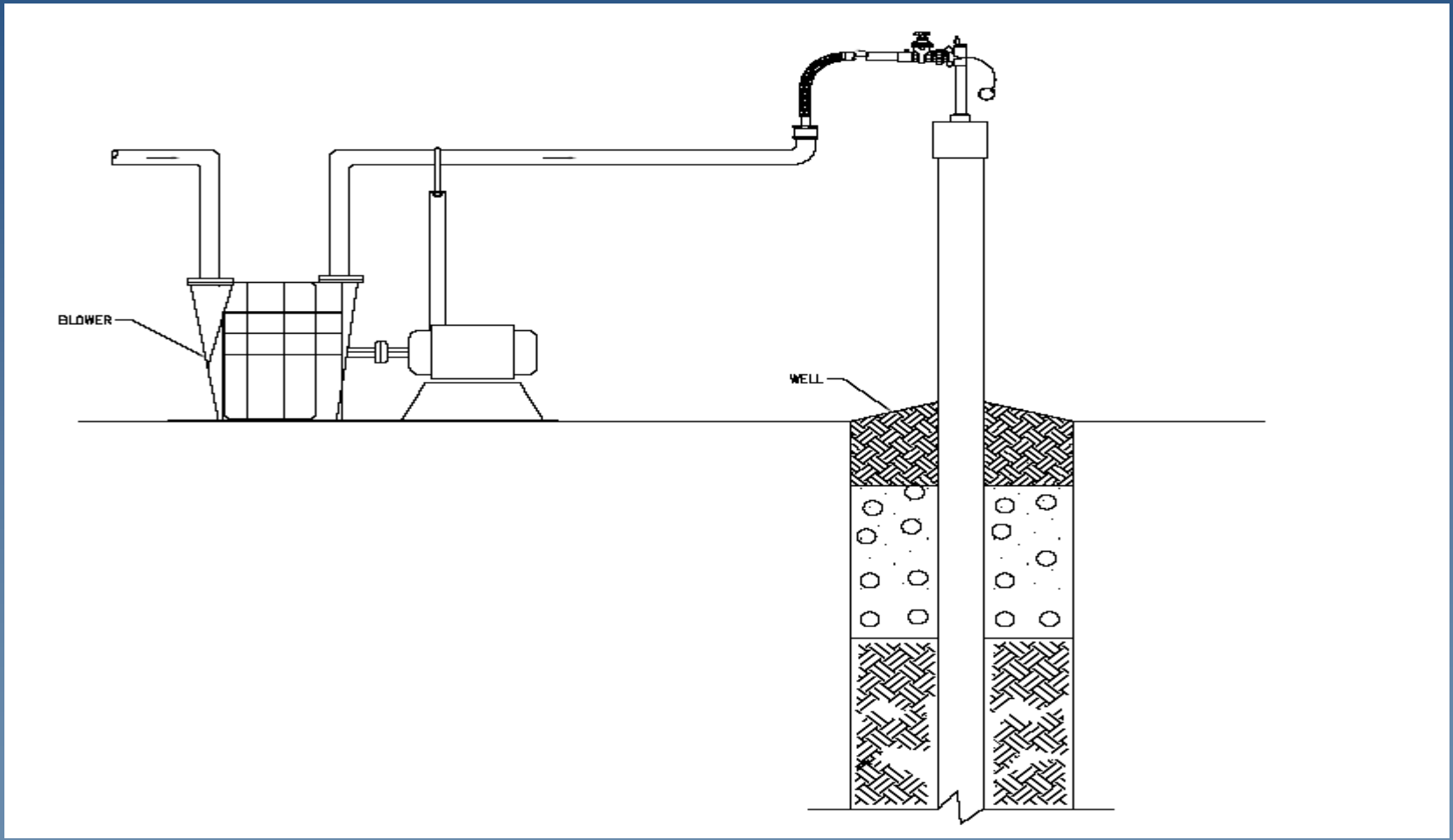

Advantages & Disadvantages of Positive Pressure Barrier Systems

- Advantages
  - Air injection is easy to implement
  - Pressure curtain
  - Aerobic attenuation
  - Good for very tight and/or fractured geology
- Disadvantages
  - Risk of fires in the refuse
  - Existing LFG in soil may be pushed from the landfill causing uncontrolled methane release
  - Does not collect LFG

WHAT TO LOOK FOR – Active Collection Systems

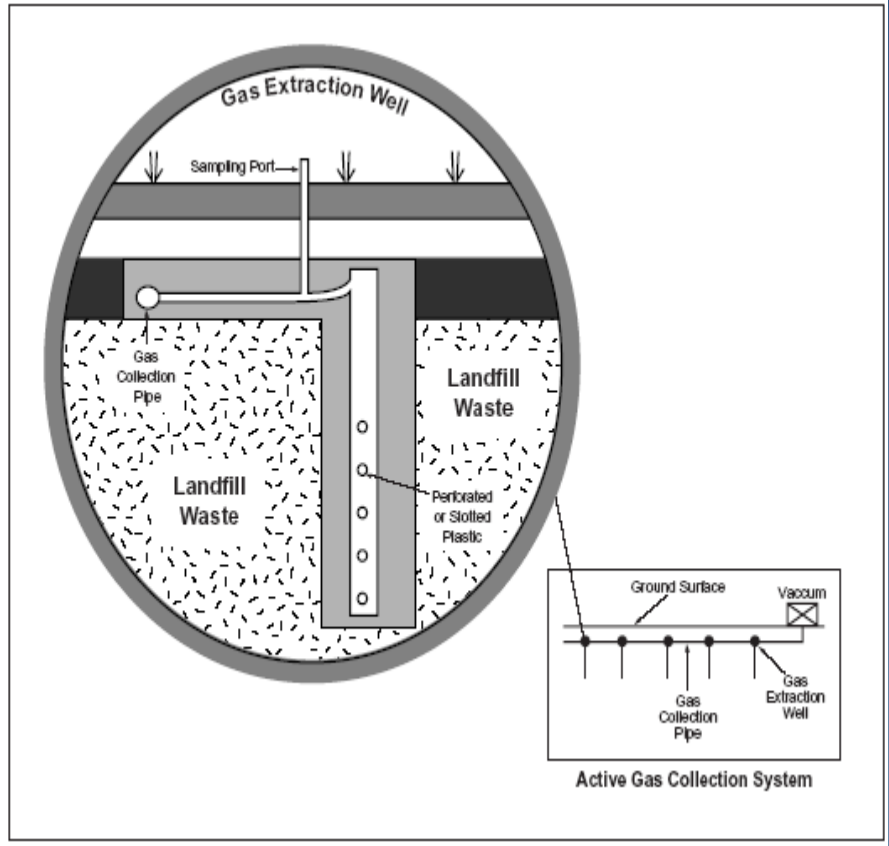

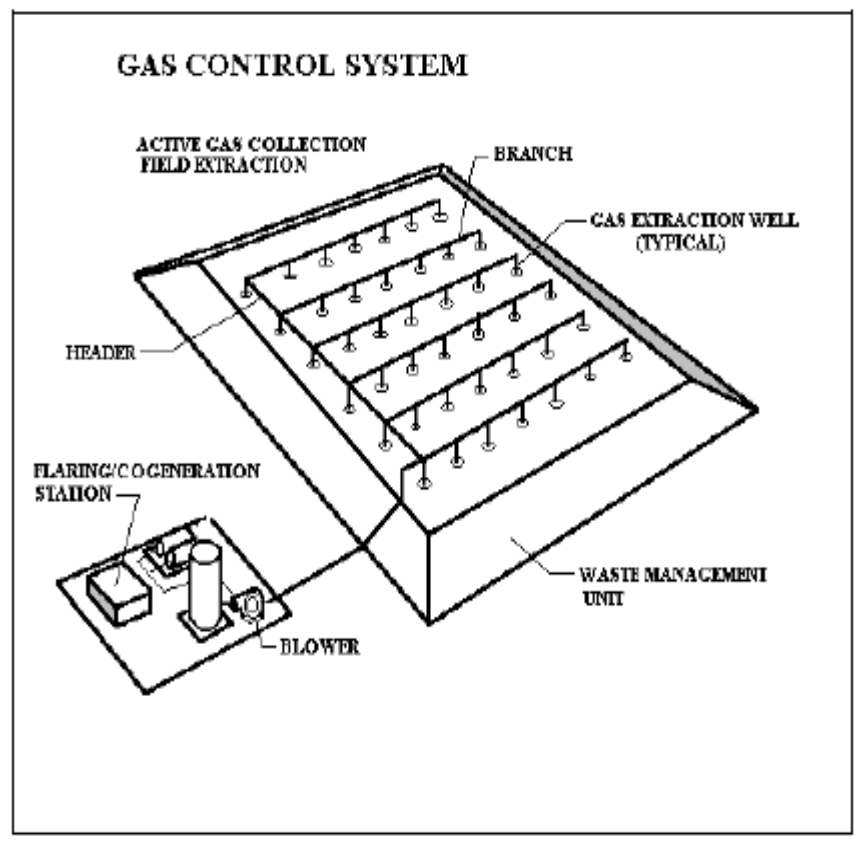

WHAT TO LOOK FOR - Active Interior Wellfield Extraction

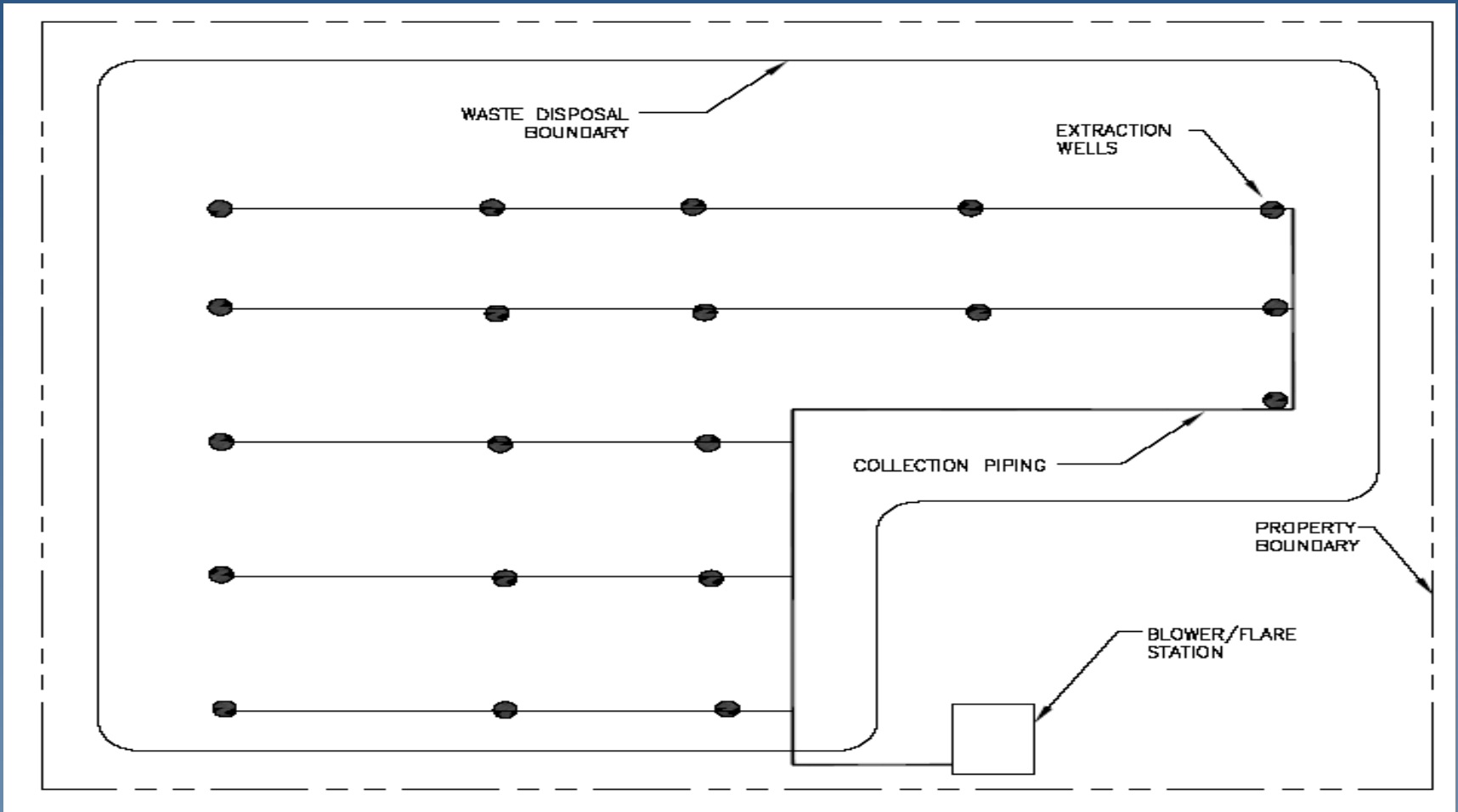

WHAT TO LOOK FOR - Active Interior Wellfield Extraction (cont.)

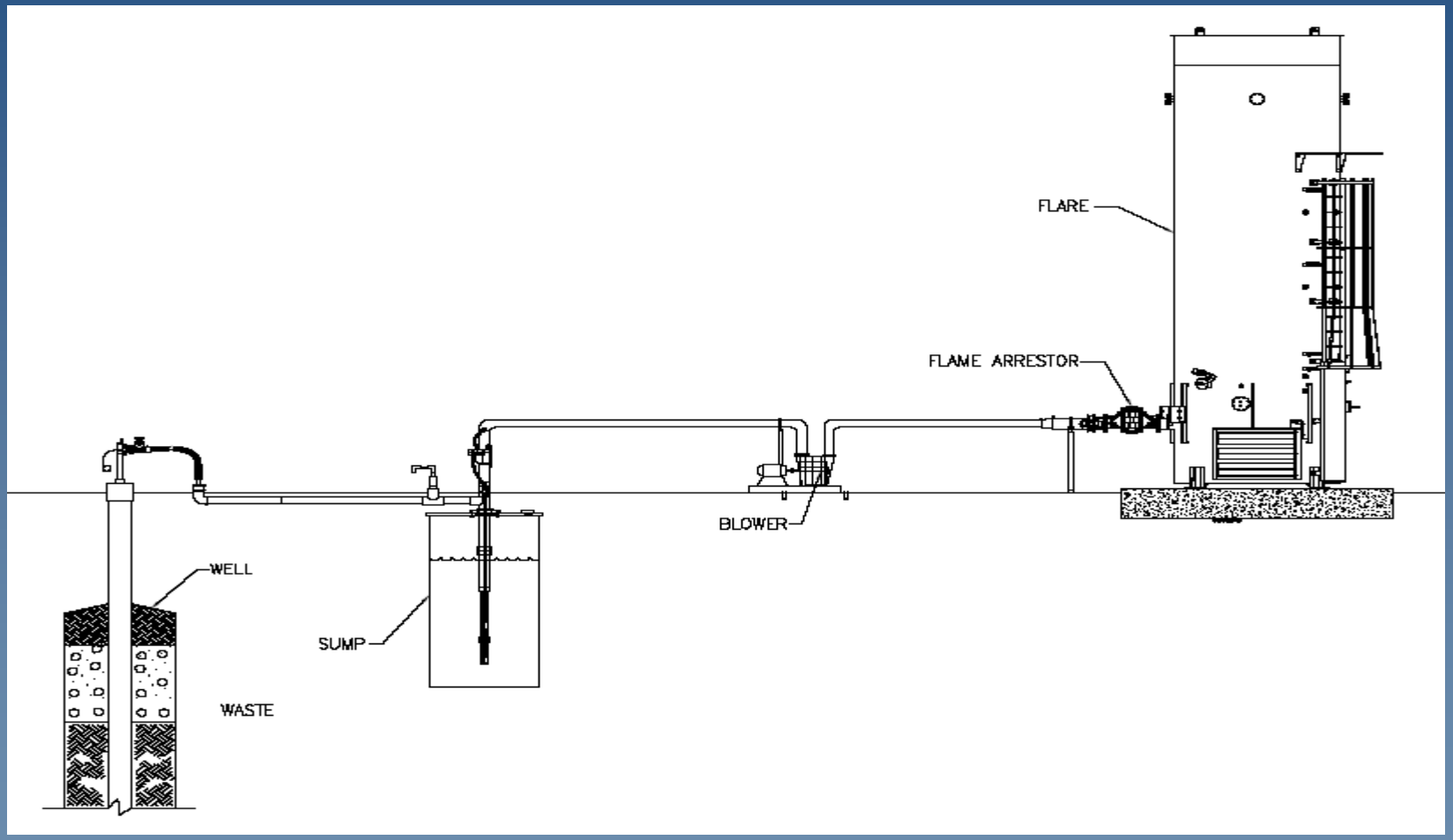

Advantages & Disadvantages of Active Interior Wellfield Extraction

- Advantages
  - Most commonly used LFG collection approach
  - Controls LFG within the waste mass
  - Can remove LFG from surrounding soil or groundwater
  - Allows beneficial use of the LFG

Advantages & Disadvantages of Active Interior Wellfield Extraction (cont.)

- Disadvantages
  - Wet landfills can cause wells to flood
  - LF settlement can cause wells to pinch or break
  - Variety of other operational issues

WHAT TO LOOK FOR - Active Perimeter Wellfield Extraction

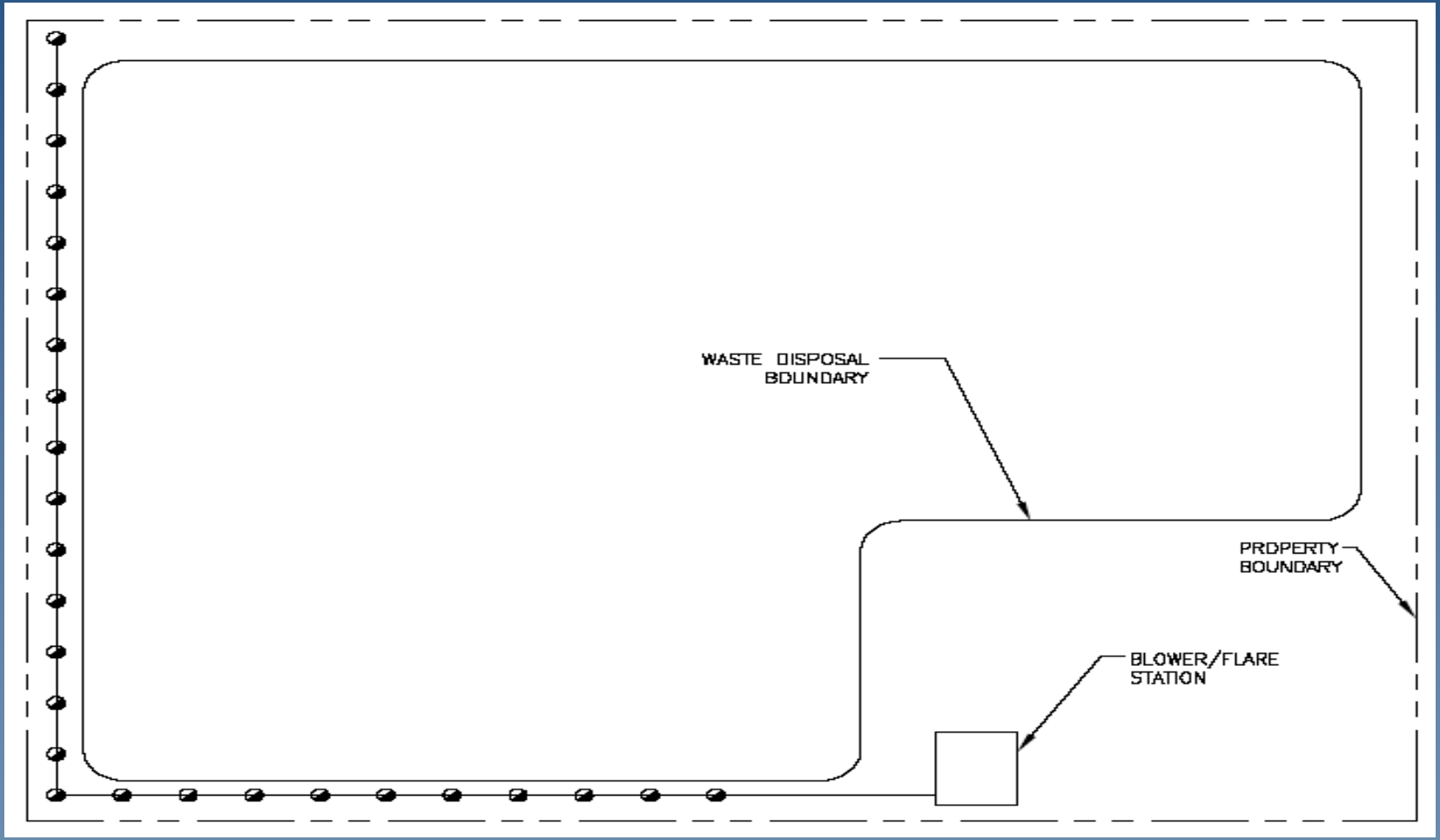

WHAT TO LOOK FOR - Active Perimeter Wellfield Extraction (cont.)

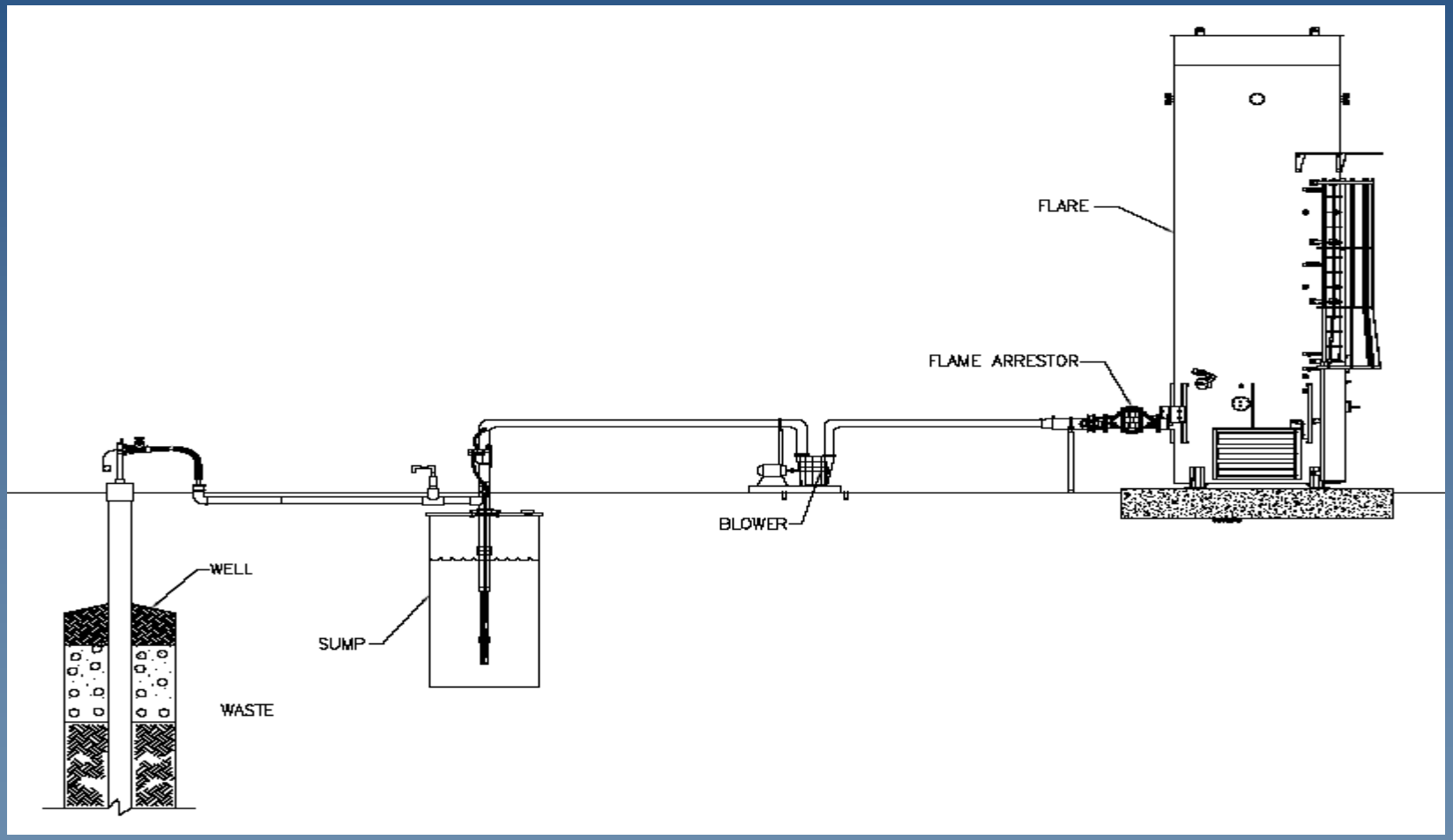

Advantages & Disadvantages of Active Perimeter Wellfield Extraction

- Advantages
  - Provides LFG control when interior wells don't work
  - Can be used to pull LFG back to a landfill
  - Little limit on vacuum applied due to reduce risk of LF fires
  - No interference with active LF operations

Advantages & Disadvantages of Active Perimeter Wellfield Extraction (cont.)

- Disadvantages
  - Increases the area of contamination by pulling LFG out of the landfill
  - Methane content in collected gas can be low, making disposal more difficult

Advantages & Disadvantages of Belt and Suspenders

- Advantages
  - Provides redundant and/or back-up systems
  - Improves control at critical sites
  - More rapid methane gas control
- Disadvantages
  - Increased costs for construction and O&M
  - More systems to maintain

WHAT TO LOOK FOR - Horizontal Wells vs. Vertical Wells

- Reduced interference with LF operations
- Early LFG Collection
- Wells can be installed when landfill is active
- Well ROI isn't as good vertically as horizontally
- Horizontally bore wells are costly to build
- Better vacuum spread throughout the landfill
- Can be installed after filling is complete
- Must Protect wells when placing trash over or around wells